SUSPENDED CEILING TRIMS DATA SHEET

EXTRUDED ARCHITECTURAL ALUMINIUM

TYPE X

APPLICATION

Type X trims are used to create a shadowgap edge detail at perimeters and abutments of plasterboard ceilings. The horizontal web of the shadowgap can be factory slotted to form an air vent if required. Curved trims manufactured from composite sections to reproduce type X trims are available.

PRODUCT INFORMATION

Supplied in 3000mm lengths, extruded from architectural grade aluminium alloy to BS 1474. Pre-punched with diagonal fixing slots and holes suitable for fixing by drywall screws. The standard finishes are white polyester powder coating to RAL 9010, 20% Gloss, or to order in a full palette of RAL colours, to match and enhance any interior scheme. Unpainted trims also available for onsite painting/ spraying, please check with your paint supplier for any additional primer products that may be required. QIC cannot accept any responsibility for the painted finish of products supplied unpainted. Non-standard lengths, factory curving and alternative factory applied finishes are available to special order.

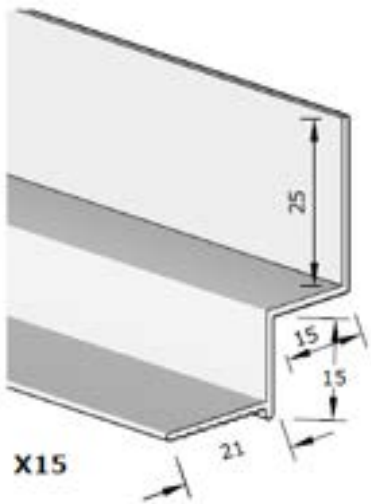

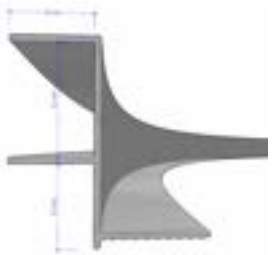

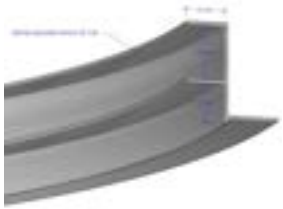

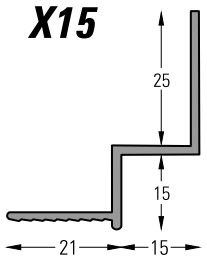

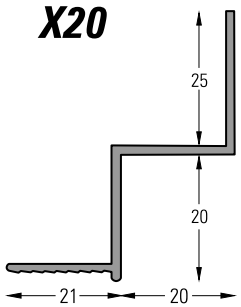

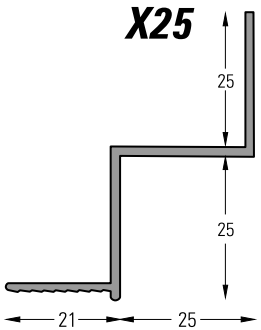

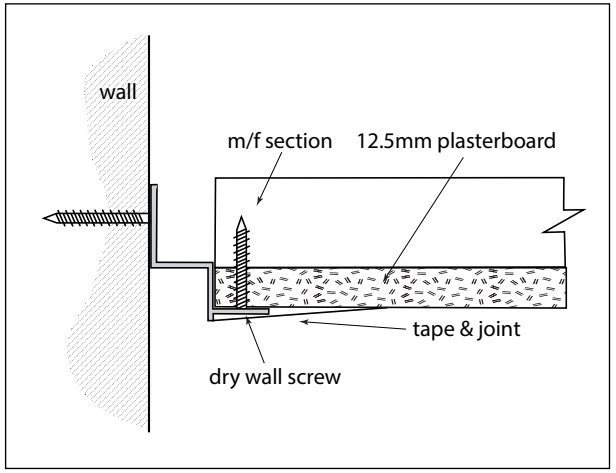

QicTrims UK Ltd ***Radclive Road, Gawcott, Bucks, MK18 4BL (UK)***
Phone: 01280 818950 Fax: 01280 818955 Email: sales@qic-trims.com